DYNAMIC THERMODYNE 6 POWER SIX-WHEEL TRUCK-TRACTOR, HIGHWAY DUTY.

CAR47PS
1372 mm (54") BBC
"HALF" SLEEPER
CAB (STD)

MACK TRUCKS AUSTRALIA

MODEL
FR712RST

STANDARD SPECIFICATIONS

WHEELBASE: 3657 mm (144").

FRAME: 270 x 82.5 x 7.9 mm (10.625" x 3.25" x .312")
Material: Heat Treated Alloy Steel
Section Modulus: 14.6
Flush Type Front Bumper. Towing Provision.

FRONT AXLE: MACK FAW537C Wide Track.
Reverse Elliot. Forged I-Beam.
Nominal Capacity: 5448 kg (12,000 lbs)
Springs: 1397 x 89 mm (55" x 3.5"); Taper Leaf Shackled Type.
Threaded Swing Shackle at rear.
No. of leaves: 3. Delrin inter-leaf liners.
Telescopic Shock Absorbers.
Brakes: Air, Cam & Lever;
Size: 419 x 127 mm, 2028 cm² (16.5" x 5", 314 in²).

BOGIE: MACK SWS58C-W"
Type: Dual Reduction, Top Mounted.
Carriers: CRDFC92 & CRD93
Inter-Axle Power Divider: In Forward Axle
Ratios: 4.64, 5.02, 5.32, 5.73, 6.34
Nominal Capacity at Ground: 15346 kg (34,000 lbs)
Springs: 1270 x 101 mm (50" x 4")
No. of leaves & thickness: 8 x 16.8 mm (.625")
Brakes: Air, Cam & Lever;
419 x 178 mm, 5676 cm² (16.5" x 7", 880 in²)
"W" Alt. Wedge Type: 381 x 178 mm, 5676 cm² (15" x 7", 880 in²)
Air Compressor: Tu-Flo 501, 340070 cm³ (12 cu. ft.)
Air Reservoir Isolated: 49200 cm³ (3000 cu. in.)
Dual Circuit System:
Breakaway Safety Valve, Hand Control Brake Valve.
Semi-Trailer Brake Connections; MGM Aux. Spring Brakes, with separate air release tank (Super "B" Failsafe w/Wedge Brakes). Low Air Pressure Indicator Buzzer Type. Hex. Air Lines.

ENGINE: MACK Thermodyne Diesel, Mod. ETAZ(B)673.
Type: Turbocharged, Intercooled, 6 cyl. in-line.
Bore & Stroke: 123 x 152 mm (4.875" x 6")
Piston Displacement: 11.01 litres (672 cu. in.)
Max. Power: 239 kW (320 bhp) @ 2100 rpm.
Max. Torque: 1360 Nm (1000 lbs. ft) @ 1500 rpm.
Fuel Pump: American Bosch, APSD-B8
Total Oil Capacity: 54.7 litres (12 Imp. gls.)
E.S.I. "Plus" Disposable Oil & Fuel Filters System.
Air Cleaner: Donaldson, Dry Type.
Radiator Frontal Area: 6450 cm² (1000 in²)
Coolant Capacity: 54 litres (11.8 Imp. gls.)
Automatic Radiator Shutters.
Flexible Lines in Fuel Circuits; Vertical Exhaust w/pol. St. Steel Heat Shield, c/w. Tail Pipe w/"Rain Cap".
Vertical Air Intake.
MACK Dynatard Engine Brake.

STARTING SYSTEM: Air, Ingersoll Rand (Key Start).

ELECTRICAL SYSTEM: 12V, 85 Amp. Alternator.

CLUTCH: Two Plate, Ceramic Metallic Button Type Facings.
Dia.: 393 mm (15.5")

TRANSMISSION: MACK Maxitorque TRDL1070
Type: 10 Speed, 3 Countershaft, Compact Overdrive
Air-shift Splitter
Ratio Range: 8.59 to .78 O/drive Rev. 28.52 to 3.32 (5)
P.T.O. Provision: Left Side: 8-Stud Std. S.A.E.
Right Side: 6-Stud Std. S.A.E.

DRIVESHAFT: Spicer 1810 Series.
Dia.: 114 mm (4.5"), Thickness: 6.5 mm (.255")

STEERING: Manual Type;
Steering Wheel Dia.: 508 mm (20"); Ratio: 28.2 : 1

WHEELS & TYRES: Wheels: Cast Steel Spoke,
Rims: 190 mm (7.5")
Tyres: 254 x 508 mm (10" x 20") x 12 ply Rayon (Aust. Mfr.)

FUEL TANKS:
1 x 321 & 1 x 228 litres (1 x 70 & 1 x 50 Imp. gls.)

CAB: CAR47PS, "Half" Sleeper, R.P. (Fibreglass).
BBC: 1372 mm (54"); Torsion Bar Tilt, Heater/Demister, Two-Way Roof Vent, Dual Windshield Wipers, Air Single Motor, Windshield Washers, Blade Mounted Jets, Door Mounted Reservoir w/integral Pump, Dual West Coast R.V. Mirrors, Laminated Windshield, Interior Sun Visor, driver's side, Fixed Frame, Cushion Type Seats, De Luxe Door Trims.

PAINTWORK: Cabin: Single Tone Colour, e.g. Mid. Green, White, Yellow, Black.
Running Gear & Frame: Black.

INSTRUMENTATION: Speedometer (km/h), Exhaust Pyrometer, Oil Pressure Gauge, Air Pressure Gauge, Voltmeter, Coolant Temp. Gauge, Tachometer, single hand, Hi Cool Temp. Low Oil Press. Warn. Syst. w/bell audio/vis. lamp alarm.

ELECTRICAL: Single Tone Horn; Automatic Reset Circuit Breaker, "Bullet" Type I.C.C. & Marker Lamps; Front Turn Indicator Lamps; Clearance Lamps, Stop & Tail Lamps, Automatic Back-up Lamp, Park Lamps, Semi-Trailer Connections.
12 tonne Jack, Handle, Wheel Wrench.

AUTOLIT
Automobile – Truck – Motorcycle 1900 to Present
ORIGINAL Sales Brochures, Manuals, Books, Posters, Catalogs, and MUCH More. World's largest selection!

OPTIONAL CARS41
2083 mm (82") BBC SLEEPER
TILT CAB: 762 mm (30") SLEEPER

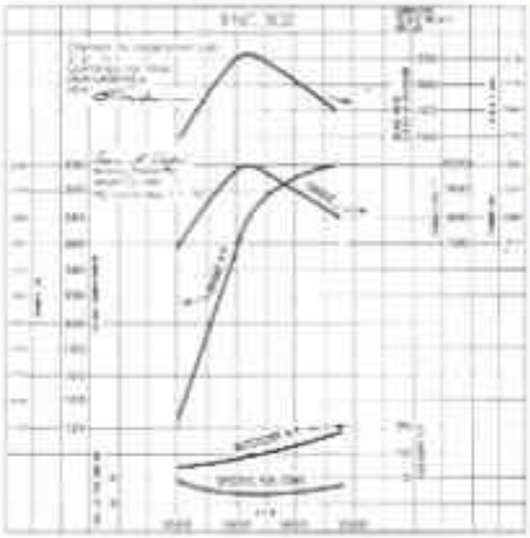

STANDARD TRANSMISSION

TRDL1070 — 10-Speed Compact O/drive Air Shift Splitter

Speed	Direct	Overdrive Split	Rev.
5th	1.00	.78	3.32
4th	1.66	1.29	5.50
3rd	2.84	2.21	9.42
2nd	4.99	3.89	16.59
1st	8.59	6.68	28.52

OPTIONAL TRANSMISSION

TRTXL1070 — 12-Speed Compact Ext. Range O/drive Air Shift Splitter

Speed	Front Comp.	Direct	O/drive Split	Double Comp.	Rev
5th		1.00	.78	—	3.32
4th		1.66	1.29	—	5.50
3rd		2.84	2.24	—	9.42
2nd		4.99	3.89	—	16.59
1st	14.44	8.59	6.68	11.23	28.52

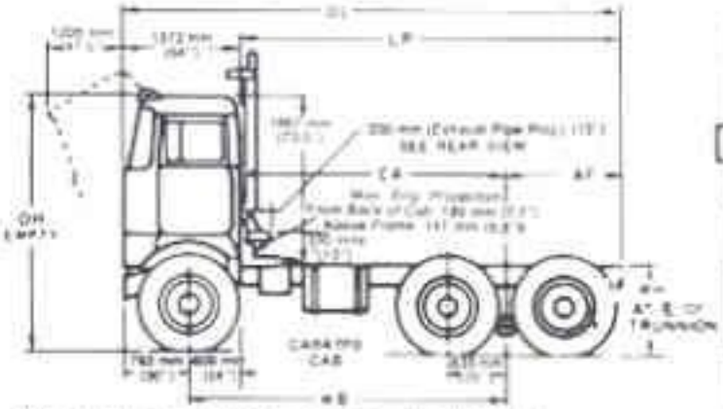

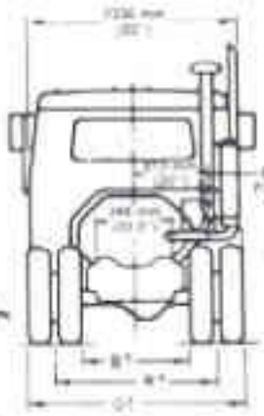

N.B. L.P. & C.A. Dimensions CARS41 Cab 18 mm (¾") longer than CARS41PS

WB	LP	CA	Optional Cab CARS41 LP	Optional Cab CARS41 CA	Standard Cab CARS41PS LP	Standard Cab CARS41PS CA	Optional Cab CARS41 LP	Optional Cab CARS41 CA	Parking Brake Pipe Outlet Fitted Pipe Right	Left
[illegible]	[illegible]	[illegible]	[illegible]	[illegible]	[illegible]	[illegible]	[illegible]	[illegible]	[illegible]	[illegible]
[illegible]	[illegible]	[illegible]	[illegible]	[illegible]	[illegible]	[illegible]	[illegible]	[illegible]	[illegible]	[illegible]
[illegible]	[illegible]	[illegible]	[illegible]	[illegible]	[illegible]	[illegible]	[illegible]	[illegible]	[illegible]	[illegible]
[illegible]	[illegible]	[illegible]	[illegible]	[illegible]	[illegible]	[illegible]	[illegible]	[illegible]	[illegible]	[illegible]
[illegible]	[illegible]	[illegible]	[illegible]	[illegible]	[illegible]	[illegible]	[illegible]	[illegible]	[illegible]	[illegible]
[illegible]	[illegible]	[illegible]	[illegible]	[illegible]	[illegible]	[illegible]	[illegible]	[illegible]	[illegible]	[illegible]
[illegible]	[illegible]	[illegible]	[illegible]	[illegible]	[illegible]	[illegible]	[illegible]	[illegible]	[illegible]	[illegible]
[illegible]	[illegible]	[illegible]	[illegible]	[illegible]	[illegible]	[illegible]	[illegible]	[illegible]	[illegible]	[illegible]
[illegible]	[illegible]	[illegible]	[illegible]	[illegible]	[illegible]	[illegible]	[illegible]	[illegible]	[illegible]	[illegible]
[illegible]	[illegible]	[illegible]	[illegible]	[illegible]	[illegible]	[illegible]	[illegible]	[illegible]	[illegible]	[illegible]
[illegible]	[illegible]	[illegible]	[illegible]	[illegible]	[illegible]	[illegible]	[illegible]	[illegible]	[illegible]	[illegible]

[illegible]

FRAME: [illegible] Single Frame
[illegible] Inside Channel Reinforcement

TYRE SIZE	OH (Approx.)	RH Empty	RH Loaded	OT	IRT	BT
254 x 508 mm (10.00 x 20)	2908 mm (114.5")	1031 mm (40.6")	960 mm (37.8")	2402 mm (94.5")	1813 mm (71.4")	1208 mm (47.6")

OPTIONAL EQUIPMENT:

STEERING: Power Assisted
EXHAUST: Underframe
FUEL TANKS: Aluminium or Steel, Round 228 to 321 litres each. Steel, Square 250 to 613 litres each.
SEATS: Air, Bostrom. **HORNS:** Air
CAB: CARS47, Steel, Non Sleeper, Tilt, BBC, 1295 mm (51"). CARS41, Steel Tilt, BBC, 2083 mm (82"). 762 mm (30") Sleeper Comp.
BODIES: Anti-sway Springs.
ELECTRICAL: Dual 178 mm (7") Headlamps, CARS41, CARS47 Cabs
PAINTWORK: To Client's Requirements in Polyurethane Paint

This policy of Mack Trucks Australia Pty. Ltd. being one of continuous product improvement, it is right is reserved to change specifications and illustrations without notice. Illustrations are not necessarily representative of actual product.

MACK TRUCKS AUSTRALIA PTY. LTD.

1728 Ipswich Rd., ROCKLEA, QUEENSLAND
P.O. Box 105, Brisbane Market, Q. 4106 Telephone: Brisbane 277 1644 Telegrams: "Macktrucks", Brisbane
Telex: MTA AA41473

12/77
SIMPSON HALLIGAN AUSTRALIA

AUTOLIT
Automobile – Truck – Motorcycle 1900 to Present
ORIGINAL Sales Brochures, Manuals, Books, Posters, Catalogs, and MUCH More. World's largest selection!

Economical
MAXIDYNE 6 POWER
SIX WHEEL HEAVY DUTY
CHASSIS,
ON/OFF HIGHWAY.

CAR47PS 1372 mm (54") BBC
"HALF" SLEEPER TILT CAB —
STANDARD

MACK TRUCKS AUSTRALIA

MODEL
FR785RS

STANDARD SPECIFICATIONS

WHEELBASE: 3657 mm (144").

FRAME: 228 x 82.5 x 6.3 mm x 6.3 mm (C
(9" x 3.25" x .25" x .25" (C)
Material: Heat-Treated Alloy Steel
Section Modulus: 14.6
Flush Type Front Bumper; Towing Provision.

FRONT AXLE: MACK FAW537C Wide Track,
Reverse Elliot, Forged I-Beam
Nominal Capacity: 5448 kg (12,000 lbs)
Springs: 1397 x 89 mm (55" x 3.5"), Taper Leaf Shackled Type
Threaded Swing Shackle at rear
No. of leaves: 3, Delrin inter leaf liners
Telescopic Shock Absorbers.
Brakes: Air, Cam & Lever,
Size: 419 x 127 mm, 2026 cm² (16.5" x 5", 314 in²).

BOGIE: MACK SAW571C, Axle Spacing: 1270 mm (50").
Type: Dual Reduction, Top Mounted
Carriers: CRDP092 & CRD93
Inter-Axle Power Divider: In Forward Axle
Ratios: 4.54, 5.02, 5.37, 5.73, 6.34
Fabricated Bogie Brackets
Nominal Capacity at Ground: 19973 kg (44,000 lbs)
Springs: 1270 x 101 mm (50" x 4")
No. of leaves & thickness: 10 x 20.02 mm (.788").
Brakes: Air, Cam & Lever,
419 x 178 mm, 5675 cm² (16.5" x 7", 880 in²).
Air Compressor: Tu-Flo 501, 340070 cm³ (12 cu. ft.)
Air Reservoir, Isolated: 49200 cm³ (3000 cu. in.)
Dual Circuit System
Breakaway Safety Valve, Hand Control Brake Valve,
Semi-Trailer Brake Connections, MGM Aux. Spring Brakes,
with separate air release tank (Super "B" Tailshaft w/wedge
Brakes), Low Air Pressure Indicator, Buzzer Type, Flex. Air Lines.

ENGINE: MACK Maxidyne Diesel, Mod. ENDTB675.
Type: Turbocharged, 6 cyl. in-line
Bore & Stroke: 123 x 152 mm (4.875" x 6")
Piston Displacement: 11.01 litres (672 cu. in.)
Max. Power: 177 kW (237 bhp) @ 1700 rpm
173 kW (235 bhp) @ 2100 rpm
Max. Torque: 1232 Nm (906 lbs.ft) @ 1200 rpm
Fuel Pump: American Bosch, APE6.88
Total Oil Capacity: 54.7 litres (12 imp. gls.)
E.S.I. "Plus" Disposable Oil & Fuel Filters System
Air Cleaner: Donaldson, Dry Type
Radiator, Frontal Area: 6450 cm² (1000 in²)
Coolant Capacity: 54 litres (11.8 imp. gls.)
Automatic Radiator Shutters
Flexible Lines in Fuel Circuits; Vertical Exhaust
w/poli St. Steel Heat Shield, c/w Tail Pipe w/ "Rain Hat"
Vertical Air Intake
MACK Dynatard Engine Brake.

STARTING SYSTEM: Air, Ingersoll Rand (Key Start).

ELECTRICAL SYSTEM: 12V, 85 Amp. Alternator.

CLUTCH: Two Plate, Ceramic Metallic Button Type Facings.
Dia.: 393 mm (15.5").

TRANSMISSION: MACK Maxitorque TRXL107,
Type: 9 Speed, Direct Top, 3 Countershaft,
Ratio Range: 14.1 Lo Low to Direct, Rev. 36.66 to 4.27 (5)
P.T.O. Provision: Left Side: 8 Stud Std. S.A.E.
Right Side: 6 Stud Std. S.A.E.
Optional Rear PTO Drive: 51% Engine rpm.

DRIVESHAFT: Spicer 1810 Series.
Dia.: 114 mm (4.5"), thickness: 6.5 mm (.250").

STEERING: Manual Type
Steering Wheel Dia.: 508 mm (20"); Ratio: 20.1 : 1.

WHEELS & TYRES: Wheels: Cast Steel Spoke;
Rims: 190 mm (7.5")
Tyres: 254 x 508 mm (10" x 20") x 12 ply Rayon (Aust. Mfr.)

FUEL TANKS: Steel Round;
1 x 321 & 1 x 228 litres (1 x 70 & 1 x 50 Imp. gls.)

CAB: CAR47PS, "Half" Sleeper, R.P. (Fibreglass),
BBC: 1372 mm (54"), Torsion Bar Tilt, Heater/Demister,
Two-Way Roof Vent, Dual Windshield Wipers, Air
Single Motor, Windshield Washers, Blade Mounted
Jets, Door Mounted Reservoir w/integral Pump,
Dual West Coast R.V. Mirrors, Laminated Windshield,
Interior Sun Visor, driver's side; Tweed Trainie, Cushion Type
Seats; De Luxe Door Trims.

PAINTWORK: Cabin: Single Tone Colour, e.g. Red, Green, White,
Yellow, Black.
Running Gear & Frame: Black.

INSTRUMENTATION: Speedometer (km/h), Exhaust Pyrometer,
Oil Pressure Gauge, Air Pressure Gauge, Voltmeter,
Coolant Temp. Gauge, Tachometer, single hand.

ELECTRICAL: Single Tone Horn, Automatic Reset Circuit Breaker,
"Bullet" Type I.C.C. & Marker Lamps, Front Turn Indicator
Lamps, Clearance Lamps, Stop & Tail Lamps, Automatic
Back-up Lamp, Park Lamps, Semi-Trailer Connections.
12 tonne Jack, Handle, Wheel Wrench.

AUTOLIT
Automobile – Truck – Motorcycle 1900 to Present
ORIGINAL Sales Brochures, Manuals, Books, Posters,
Catalogs, and MUCH More. World's largest selection!

FR785RS

Economical
MAXIDYNE 6 POWER
SIX WHEEL HEAVY DUTY CHASSIS,
ON/OFF HIGHWAY.

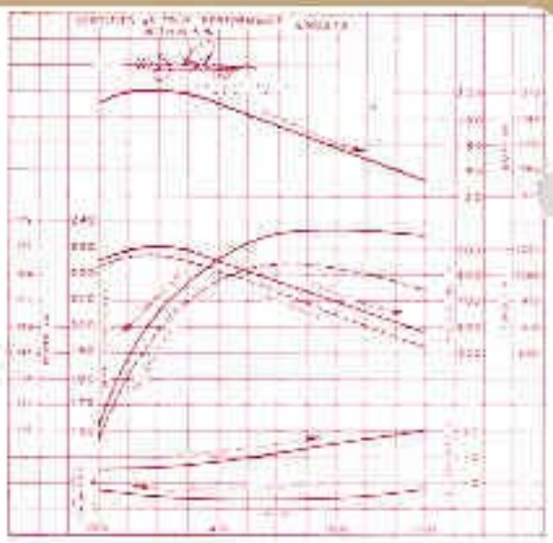

OPTIONAL CARS41
2083 mm (82") BBC SLEEPER
TILT CAB; 762 mm (30") SLEEPER COMPARTMENT

OPTIONAL EXTRA TRANSMISSIONS, MAXITORQUE 3-COUNTERSHAFT.

TRL1078 — 5-Speed

Speed	Direct
1st	8.59
2nd	4.99
3rd	2.84
4th	1.66
5th	1.00
Rev	8.81

TRDL1070 — 10-Speed Compact O/drive Air Shift Splitter

Speed	Direct	Overdrive Split	Rev.
5th	1.00	.78	3.32
4th	1.66	1.29	5.50
3rd	2.84	2.21	9.42
2nd	4.99	3.89	16.59
1st	8.59	6.68	28.52

TRTXL1070 — 12-Speed Compact Ext. Range O/drive Air Shift Splitter

Speed	Front Comp.	Direct	O/drive Split.	Double Comp.	Rev.
6th		1.00	.78	—	3.32
4th		1.66	1.29	—	5.50
3rd		2.84	2.24	—	9.42
2nd		4.99	3.89	—	16.59
1st	14.44	8.59	6.68	11.23	28.52

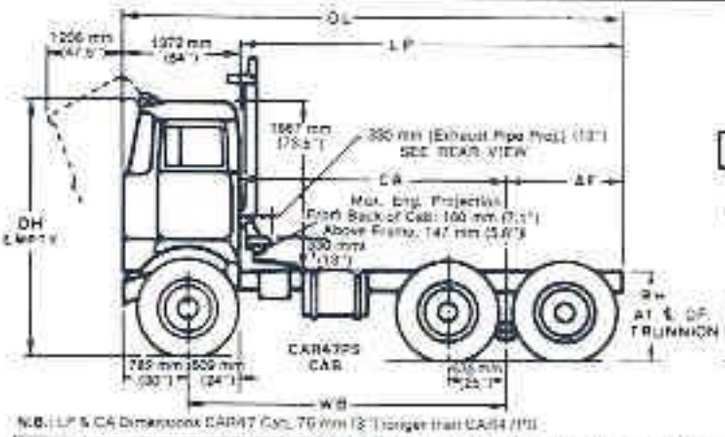

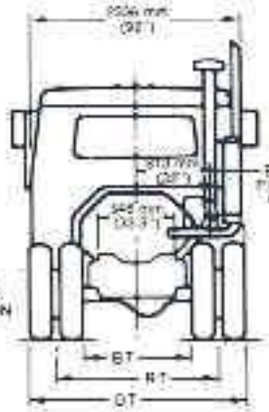

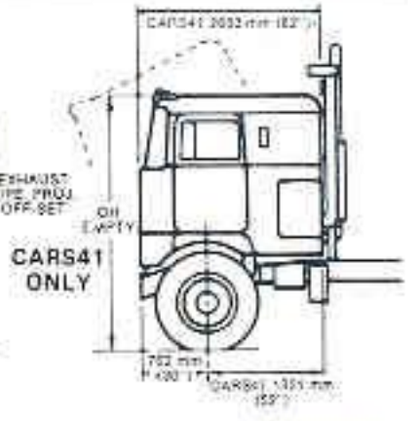

N.B.: LP & CA Dimensions CAR47 Cab, 76 mm (3") longer than CAR47PS

WB	AF	OL	Optional Cab CAR47		Standard Cab CAR47PS		Optional Cab CARS41		Turning Circle Dia. (over tires or bumper)	
			LP	CA	LP	CA	LP	CA	Right	Left
[illegible]	[illegible]	[illegible]	[illegible]	[illegible]	[illegible]	[illegible]	[illegible]	[illegible]	[illegible]	[illegible]
[illegible]	[illegible]	[illegible]	[illegible]	[illegible]	[illegible]	[illegible]	[illegible]	[illegible]	[illegible]	[illegible]
[illegible]	[illegible]	[illegible]	[illegible]	[illegible]	[illegible]	[illegible]	[illegible]	[illegible]	[illegible]	[illegible]
[illegible]	[illegible]	[illegible]	[illegible]	[illegible]	[illegible]	[illegible]	[illegible]	[illegible]	[illegible]	[illegible]
[illegible]	[illegible]	[illegible]	[illegible]	[illegible]	[illegible]	[illegible]	[illegible]	[illegible]	[illegible]	[illegible]
[illegible]	[illegible]	[illegible]	[illegible]	[illegible]	[illegible]	[illegible]	[illegible]	[illegible]	[illegible]	[illegible]
[illegible]	[illegible]	[illegible]	[illegible]	[illegible]	[illegible]	[illegible]	[illegible]	[illegible]	[illegible]	[illegible]
[illegible]	[illegible]	[illegible]	[illegible]	[illegible]	[illegible]	[illegible]	[illegible]	[illegible]	[illegible]	[illegible]
[illegible]	[illegible]	[illegible]	[illegible]	[illegible]	[illegible]	[illegible]	[illegible]	[illegible]	[illegible]	[illegible]
[illegible]	[illegible]	[illegible]	[illegible]	[illegible]	[illegible]	[illegible]	[illegible]	[illegible]	[illegible]	[illegible]
[illegible]	[illegible]	[illegible]	[illegible]	[illegible]	[illegible]	[illegible]	[illegible]	[illegible]	[illegible]	[illegible]
[illegible]	[illegible]	[illegible]	[illegible]	[illegible]	[illegible]	[illegible]	[illegible]	[illegible]	[illegible]	[illegible]
[illegible]	[illegible]	[illegible]	[illegible]	[illegible]	[illegible]	[illegible]	[illegible]	[illegible]	[illegible]	[illegible]

TYRE SIZE	OH (Approx.)	RH		DT	RT	BT
		Empty	Loaded			
254 x 508 mm (10.00 x 20)	2900 mm (114.5")	1031 mm (40.6")	960 mm (37.5")	2420 mm (95.3")	1810 mm (71.3")	1200 mm (47.5")

OPTIONAL EQUIPMENT:

BOGIE: SWS571C with 1397 mm (55") Axle Spacing; Cast Steel Spoke Brackets.
SWS69C, rated 24970 kg (55,000 lbs); Chassis Model becomes FR785RSX; 1371 mm (54") Axle Spacing; Cast Steel Spoke Brackets; Power Divider Lockout, either Bogie

FRONT AXLE: FAW617C, rated 9080 kg (20,000 lbs).

STEERING: Power Assisted

FUEL TANKS: Aluminium or Steel, Round, 250 to 613 litres each.

EXHAUST: Underframe **HORN/S:** Air **SEAT/S:** Air, Bostrom

CAB: CAR47, Steel, Non-Sleeper, Tilt; BBC; 1295 mm (51"); CARS41, Steel, Full Sleeper, Tilt, BBC, 2083 mm (82"), 762 mm (30") Sleeper Comp., includes mattress

PAINTWORK: to client's requirements (polyurethane paint)

The policy of Mack Trucks Australia Pty. Ltd. being one of continuous product improvement, the right is reserved to change specifications and dimensions without notice.

MACK TRUCKS AUSTRALIA PTY. LTD.

1728 Ipswich Rd., ROCKLEA, QUEENSLAND

P.O. Box 105, Brisbane Market, Q. 4106 Telephone: Bris. 277 1644 Telegrams: "Macktrucks", Brisbane

Telex: MTA AA41473

2.77 SIMPSON HALLIGAN, AUSTRALIA

AUTOLIT Automobile – Truck – Motorcycle 1900 to Present
ORIGINAL Sales Brochures, Manuals, Books, Posters, Catalogs, and MUCH More. World's largest selection!

CAS 40 SLEEPER — TILT CAB

30" SLEEPER BERTH

FR785RST

MAXIDYNE POWER
SIX WHEEL TRUCK-TRACTOR
HIGHWAY DUTY

SPECIFICATIONS

WHEELBASE . . . . . 144 ins.

ENGINE, Mack Diesel . . . . . ENDT675 Maxidyne

Type . . . . . Turbocharged, In Line 6 Cyl.
Bore & Stroke . . . . . 4-⅝" x 6"
Piston Displacement, Cu. Ins. 672
Max. Brake Horsepower 237
Max. Torque @ 1200 R.P.M. 906
Lube Oil Filter (10 qts). Comb. full-flow by pass.
Air Cleaner . . . . . Dry Type.
Radiator, Frontal Area . . . . . 1000 Sq. Ins.
Water Capacity, qts. 15 galls.
Thermostat, to open 170° F.
Fuel Pump . . . . . American Bosch, APE 6
Fuel Tanks (Imp. Galls.) 1 x 58, 1 x 44

STARTING SYSTEM . . . . Air

ELECTRICAL SYSTEM . . . . 12V, 55 Amp.

CLUTCH CL74

Type . . . . . 2 Plate
Area of Engagement 420 Sq. Ins.

TRANSMISSION (Mack Maxitorque TRL1078

Type . . . . Five Speed Direct Triple
Countershaft, P.T.O. Gears, 6 Holes S.A.E. left Side, 6 Hole S.A.E. Right Side.
Ratio Range: 8.59 Low to Direct 5th, Reverse: 6.81.

OPTIONAL EXTRA TRANSMISSIONS, MAXITORQUE:

TRXL107 . . . . 6 Speed, 5 Reverse Ratios.

Ratio Range, 14.10 Lo-Low to Direct Top.
Reverse Range: 36.66 to 4.27.
P.T.O.: 8 Holes S.A.E. Left Side; 6 Holes S.A.E. Right Side.

TRDL107 . . . . 10 Speed, Compact Underdrive Splitter.

Ratio Range: 11.04 to Direct Top.
Reverse Range: 36.66 to 4.27.
P.T.O.: As TRL1078 and TRXL107, plus optional rear P.T.O., 61% engine R.P.M. in direct.

TRTXL107 . . . . 12 Speed Compact Extended Range

Underive Splitter.
Ratio Range: 18.56 to Direct Top.
Reverse Range: 36.66 to 4.27.
P.T.O.: As in low range TRDL107, plus 31% engine R.P.M.

N.B. All Transmissions: 5 P.T.O. Speeds.
Available from 6 and 8 Hole Side P.T.O's.

DRIVESHAFT

Make and Size . . . . Spicer, 1700 Series

BOGIE . . . . . Mack SWDL561

Ratios 4, 17, 4.5, 4.76
Carriers (Dual Reduction) CRDPD92 & CRD93
Nominal Capacity at Ground . . . 34,000 lbs.

FRONT AXLE (Mack) FA532

Nominal Capacity 12,000 lbs.

SPRINGS

	Front	Rear
Size	54 x 3.5"	50" x 4"
Leaves No. & thickness	10 x .323"	8" x .625"

BRAKES

Front 15½" x 4" (276 Sq. Ins.)
Rear 16½" x 7" (952 Sq. Ins.)
Air Compressor TU Flo 500 (12 Cu. Ft. approx.)
Air Reservoir Capacity 2960 Cu. Ins. (approx.)

WHEELS & TYRES

Wheels Cast Spoke.
Tyres 10.00 x 20 x 12 ply (11) Rims 7.5" (Aust. manufacture)

STEERING GEAR . . . . Sheppard Power Type.

Steering Wheel dia.; Ratio . . . 20" 31.4:1

FRAME

Size	Material	Section Modulus
9" x 3⅛" x ⅜"	Heat Treated Alloy Steel	9.76

CAB (Mack) CAS40

Type: Tilt-Sleeper, 60.5" BBC
36" Sleeper Compartment
6" Mattress
Draw Curtains
Reading Light
Cab Tilt Angle, 40°

AUTOLIT
Automobile – Truck – Motorcycle 1900 to Present
ORIGINAL Sales Brochures, Manuals, Books, Posters, Catalogs, and MUCH More. World's largest selection!

CA 38 50.5"

NON-SLEEPER TILT CAB

CHASSIS AND CAB EQUIPMENT (Common to Both Cab Types)

Automatic Radiator Shutters
Flush Type Front Bumper
Automatic reset circuit breaker
Cab roof vent
Air Horn
I.C.C. and Marker Lamps
Front Parking Lamps
Front Turn Indicator Lamps
Clearance Lamps
Stop & Tail Lamps
Automatic Back up Lamp
Interior Sun Visor, driver's side
Tachourmeter, single hand
Speedometer
Breakaway Safety Valve
Hand Control Brake Valve
Semi-Trailer Brake & Electrical connections
Dual Windshield Wipers, air, single motor
Windshield Washers
Aeroquip Flex. Lines, Oil, Air & Fuel
Exhaust Pyrometer
Voltmeter
Bostrom Viking T Bar Driver's Seat.
Paintwork: Single Colour to Client's choice, variations, optional extra Running Gear & Undercarriage, Black.
Low Air pressure indicator, buzzer type
Dual West Coast Rear Vision Mirrors
Front Shock Absorbers
Solex Windshield
Vertical Exhaust
12 ton Jack, Handle, Wheel Wrench
Front Towing Shackles
Isolated Air Brake Reservoir
M.G.M. Auxiliary Spring Brake with separate air release tank.

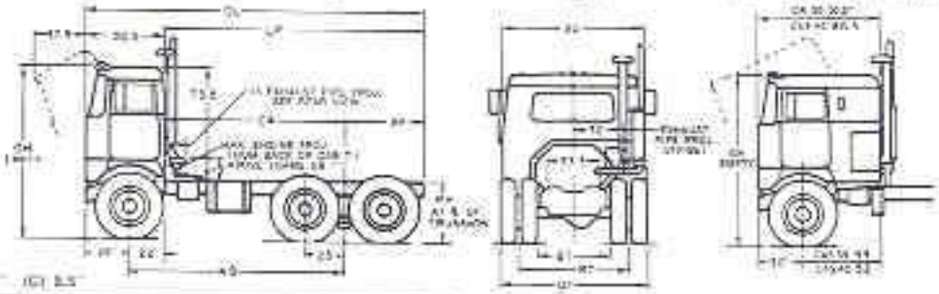

F-MT: (A) 19" (B) 7.1" (C) 8.5"

WB	Standard Cab CA 38		Sleeper Cab CAS 40		AP	OL	Turning Circle Dia. (Outer edge of tyre) Ft.	
	LP	CA	LP	CA			Right	Left
144	170	122	140	92	48	300.0	57 ft.	57 ft.
165	191	143	191	113	48	241.5	63 ft.	63 ft.
192	270	164	240	134	105	290.5	71 ft.	71 ft.
244	342	222	312	192	120	358.5	68 ft.	68 ft.

Chassis dimensions are in inches and are for standard chassis unless otherwise detailed.

TYRE SIZE	OH Approx.	BH				OT
		Empty		Loaded		
		SWDL 66	SWDL 75 SWU 75	SWDL 66	SWDL 75 SWU 75	
10.00-20	114.2	42.5	40.6	37.9	36.1	65.0
10.00-22	119.7	41.3	41.6	36.9	36.1	66.3
11.00-20	115.3	41.1	41.5	36.5	36.3	66

Frame heights are subject to variations 1" empty, ½" loaded.

Illustrations and Specifications may be subject to change without notice.

MACK TRUCKS Australia Pty. Ltd.

1728 IPSWICH ROAD, ROCKLEA, QUEENSLAND 4106
TELEPHONE: BRISBANE 47 1644 TELEGRAMS: MACKTRUCKS, BRISBANE

SIMPSON HALLIGAN, AUSTRALIA

AUTOLIT
Automobile – Truck – Motorcycle 1900 to Present
ORIGINAL Sales Brochures, Manuals, Books, Posters, Catalogs, and MUCH More. World's largest selection!

NEW COOL POWER Mack 300

ECONOMICAL, COOL, CLEAN MAXIDYNE "300" POWER FOUR-WHEEL TRUCK-TRACTOR.

CAR47PS
1372 mm (54") BBC
"HALF" SLEEPER
TILT CAB

MACK TRUCKS AUSTRALIA

MODEL
FR786RT

STANDARD SPECIFICATIONS

WHEELBASE: 3251 mm (128").

FRAME: 266 x 92.5 x 6.3 mm (10.5" x 3.25" x .25").
Material: Heat Treated Alloy Steel
Section Modulus: 11.83.
Flush Type Front Bumper; Towing Provision.

FRONT AXLE: MACK FAW537C Wide Track;
Reverse Elliot, Forged I-Beam.
Nominal Capacity at Ground: 5448 kg (12,000 lbs).

Springs: 1397 x 89 mm (55" x 3.5") Taper Leaf,
Shackle Type: Threaded Swing Shackle at rear.
No. of leaves: 3. Delrin Inter Leaf Liners.
Telescopic Shock Absorbers.

Brakes: Air, Cam & Lever;
Size: 419 x 127 mm, 2014 cm² (16.5" x 5", 314"²).

DRIVE AXLE: MACK RAD523C/W*
Type: Dual Reduction, Face Mount.
Carrier: CRD117; with opt. Inter Wheel P/Divider: CRDL1171.
Ratios: 4.00, 4.25, 4.62, 4.89, 5.43, 5.78, 6.36, 6.8.
Nominal Capacity at Ground: 10442 kg (23,000 lbs).

Springs: 1365 x 76 mm (53.75" x 3");
Leaves, No. & thickness: 6 x 14.1 mm (.555"),
2 x 12.5 mm (.492").

Brakes: Cam & Lever;
Size: 419 x 178 mm, 2793 cm² (16.5" x 7", 434"²).
*Alt. Wedge Type: 381 x 178 mm, 2838 cm² (15" x 7", 440"²).
Air Compressor: Tu Flo 501, 34007 cm³ (3000 cu in).
Air Reservoir, Isolated, Cap.: 49200 cm³ (3000 cu in).

Dual Circuit System.
Brookway Safety Valve; Hand Control Valve; Semi-Trailer Brake Connections; MGM Aux. Spring Brake, with separate release tank; (Super "B" Failsafe w/Wedge Brakes); Low Air Pressure Indicator, Buzzer Type; Flex. Lines in Fuel Circuits.

ENGINE: MACK Maxidyne "300" Diesel, Mod. ENDT866.
Type: Turbocharged, Inter-cooled, 6 cyl. In-line.
Bore & Stroke: 123 x 152 mm (4.875" x 6").
Piston Displacement: 11.01 litres (672 cu in).
Max. Power: 212 kW (285 bhp) @ 1800 rpm.
211 kW (283 bhp) @ 2100 rpm.
Max. Torque: 1469 Nm (1090 ft/lbs) @ 1200 rpm.
Fuel Pump: American Bosch, APE6 80.
Total Oil Capacity, 54.7 litres (12 Imp Gall).
E.S.I. "Plus" Disposable Oil & Fuel Filters System.
Air Cleaners: Donaldson, Dry Type.
Radiator, Frontal Area: 6450 cm² (1000"²).
Coolant Capacity: 54 litres (11.8 Imp Gall).
Automatic Radiator Shutters.
Flex. Lines in Fuel Circuits; Vertical Exhaust, w/pol. St. Steel Heat Shield, c/o. Tail Pipe w/"Rain Hat".
Vertical Air Intake.
MACK Dynatard Engine Brake.

STARTING SYSTEM: Air, Ingersoll Rand (Key Start).

ELECTRICAL SYSTEM: 12V, 85 Amp. Alternator.

CLUTCH: Two Plate, Ceramic Metallic Button Type Facings;
Dia.: 393 mm (15.5").

TRANSMISSION: MACK Maxitorque TBL1078.
Type: Five Speed, Direct 5th, 3 Countershaft.
Ratio Range: 8.59 to Direct; Rev.: 8.81.
P.T.O. Provision: Left Side, 8-Stud Std. S.A.E.
Right Side, 6-Stud Std. S.A.E.

DRIVESHAFT: Spicer 1810 Series;
Dia.: 114 mm (4.5"); thickness: 6.5 mm (.256").

STEERING: Manual Type;
Steering Wheel Dia.: 508 mm (20"); Ratio: 28.1 : 1.

WHEELS & TYRES: Wheels, Cast Steel Spoke;
Rims: 190 mm (7.5");
Tyres: 254 x 508 mm (10" x 20") x 12 ply Rayon (Aust Mfr).

FUEL TANKS: Steel Round;
1 x 321 litres & 1 x 228 litres (70 Imp Gall & 50 Imp Gall).

CAB: CAR47PS, "Half" Sleeper, R.P. (Fibreglass);
BBC: 1372 mm (54"); Torsion Bar Tilt.
Heater/Demister; Two-Way Roof Vent; Dual Windshield Wipers, Air, Single Motor; Windshield Washers, Blade Mounted Jets, Door Mounted Reservoir w/integral pump; Dual West Coast R.V. Mirrors; Laminated Windshield; Interior Sun Visor, driver's side; Fixed Frame, Cushion Type Seats, De Luxe Door Trims.

PAINTWORK: Cabin: Single Tone Colour, e.g. Red, Green, White, Yellow, Black.
Running Gear & Frame: Black.

INSTRUMENTATION: Speedometer (km/h); Exhaust Pyrometer; Oil Pressure Gauge; Air Pressure Gauge; Voltmeter; Coolant Temp. Gauge; Tachometer, single hand.

ELECTRICAL: Single Tone Horn; Automatic Reset Circuit Breaker; "Bullet" Type I.C.C. & Marker Lamps; Front Turn Indicator Lamps; Clearance Lamps; Stop/Tail Lamps; Automatic Back-up Lamp; Park Lamps; Semi-Trailer Connections.

12 tonne Jack, Handle, Wheel Wrench.

AUTOLIT
Automobile – Truck – Motorcycle 1900 to Present
ORIGINAL Sales Brochures, Manuals, Books, Posters, Catalogs, and MUCH More. World's largest selection!

OPTIONAL CARS40

2083 mm (82") BBC SLEEPER TILT CAB:

762 mm (30") SLEEPER COMPARTMENT

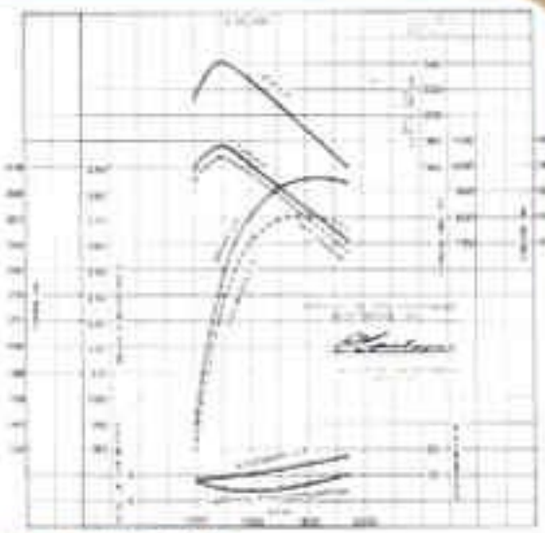

STANDARD TRANSMISSION 5-SPEED

TRL1078

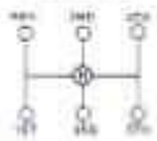

Speed	Direct
1st	8.59
2nd	4.99
3rd	2.84
4th	1.88
5th	1.00
Rev.	8.61

OPTIONAL TRANSMISSIONS

TRXL107 . . . 5 SPD. TRDL107 . . . 10 SPD.

TRXL107

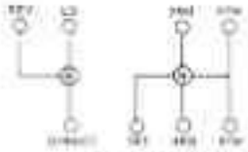

Speed	Direct	Lo Range	Rev
1st	8.59	16.10	35.99
2nd	4.99	—	21.32
3rd	2.84	—	12.11
4th	1.88	—	7.07
5th	1.00	—	4.27

5-SPEED, LO-RANGE LOW & REVERSE

TRDL107

Speed	Direct	Under Drive	Rev
1st	8.59	11.04	35.99
2nd	4.99	6.42	21.32
3rd	2.84	3.65	12.11
4th	1.88	2.13	7.07
5th	1.00	1.29	4.27

10-SPEED

AIR SPLITTER SHIFT

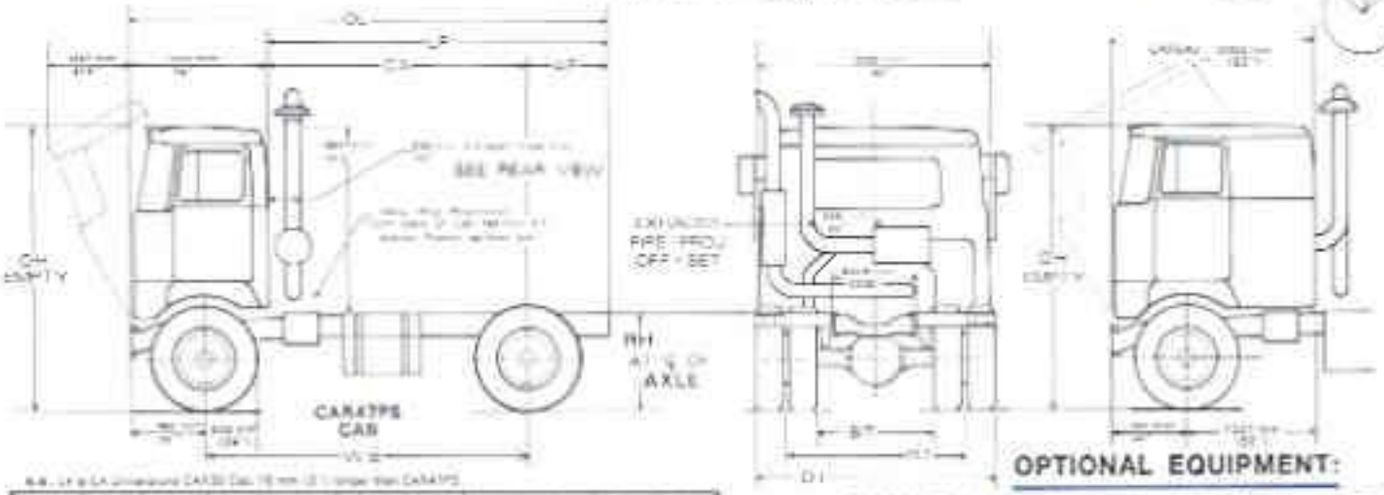

N.B. LF & LA dimensions CAR38 Cab 76 mm (3") longer than CAR43PS

Wheelbase	BA	LD	CAR38 Standard Cab LF	CAR38 Standard Cab LA	CAR43PS Standard Cab LF	CAR43PS Standard Cab LA	CAR40 Optional Cab LF	CAR40 Optional Cab LA	Turning Circle Wheelbase Angles	Turning Circle Wheelbase Lock
[illegible]	[illegible]	[illegible]	[illegible]	[illegible]	[illegible]	[illegible]	[illegible]	[illegible]	[illegible]	[illegible]
[illegible]	[illegible]	[illegible]	[illegible]	[illegible]	[illegible]	[illegible]	[illegible]	[illegible]	[illegible]	[illegible]
[illegible]	[illegible]	[illegible]	[illegible]	[illegible]	[illegible]	[illegible]	[illegible]	[illegible]	[illegible]	[illegible]
[illegible]	[illegible]	[illegible]	[illegible]	[illegible]	[illegible]	[illegible]	[illegible]	[illegible]	[illegible]	[illegible]
[illegible]	[illegible]	[illegible]	[illegible]	[illegible]	[illegible]	[illegible]	[illegible]	[illegible]	[illegible]	[illegible]

Sleeper dimensions are in Millimetres, and closely are given in parenthesis under inches (decimal). Turning Circles are in metres and feet.

TYRE SIZE	OH (Approx)	RH Empty	RH Loaded	OT	RT	BT
294 x 508 (10.00 x 20")	2006 (114.6")	1044 (41")	950 (37.5")	2420 (95.5")	1815 (71.4")	1206 (47.5")

Frame heights are subject to variations: 20 mm (1") empty, 12.7 mm (.5") loaded. Dimensions are in Millimetres and Inches.

OPTIONAL EQUIPMENT:

CABIN: CAR38, Steel, Non-Sleeper Tilt; BBC: 1295 mm (51"); CARS40, Steel, Full Sleeper Tilt; BBC: 2083 mm (82"); 762 mm (30") Sleeper Comp. Includes mattress.

ENGINE: Maxi Miser Dual Speed Governor (Improved fuel economy).

STEERING: Power Assisted.

FUEL TANKS: To Suit Application.

DRIVE AXLE: RAD533C/W, 10442 kg (23,000 lbs); Brakes as RAD529C/W*. RAD608C, 12272 kg (27,000 lbs) capacity; Brakes: 419 x 178 mm (16.5" x 7") Cam & Lever.

SEAT/S: Air, Bostrom.

EXHAUST: Underframe.

HORN/S: Air.

FRAME/S: 228 x 82.5 x 6.3 mm (9" x 3.25" x .25"), with 6.3 mm (.25") I.C. Reinforcement.

PAINT COLOURS: To Client's requirements in Polyurethane Paint.

The policy of Mack Trucks Australia Pty. Ltd. being one of continuous product improvement, the right is reserved to change specifications and dimensions without notice.

MACK TRUCKS AUSTRALIA PTY. LTD.

1728 IPSWICH RD., ROCKLEA, QUEENSLAND

P.O. Box 105, Brisbane Market, Q. 4106 Telephone: Bris. 277 1644 Telegrams: "Macktrucks", Brisbane. Telex: MTA AA41473

2/77

SIMPSON HALLIGAN, BRISBANE

AUTOLIT

Automobile – Truck – Motorcycle 1900 to Present
ORIGINAL Sales Brochures, Manuals, Books, Posters, Catalogs, and MUCH More. World's largest selection!

FR795RS

CAS 40 SLEEPER — TILT CAB
30" SLEEPER COMPARTMENT

HEAVY DUTY TANDEM DRIVE CHASSIS

DYNAMIC
V8 MAXIDYNE
DIESEL POWER

SPECIFICATIONS

WHEELBASE: 144", 165", 186", 244"
(See Chart on rear)

ENGINE:
Mack Diesel, ENDT865 Maxidyne
Type: Turbocharged, 90° Vee Eight, Open Chamber
Bore and Stroke: 5.25" x 5"
Piston Displacement: 866 cu. ins. 14.2 litres
R.A.C./A.M.A. Horsepower Rating: 88.2
Brake Horsepower: @ 1350 r.p.m., 280
@ 2100 r.p.m., 325
@ 2400 r.p.m., 322
Max. Torque: 1100 lbs/ft @ 1350 r.p.m.
Lube Oil Filter: (10 Imp. Qts.) Comb. Full flow and by-pass
Total Engine Oil Capacity, incl. filter: 28 Imp. Qts.
Air Cleaner: Dry Type, Standard
Radiator: Frontal Area, 1000 sq. ins. std.
Water Capacity: 47 Imp. Qts. (engine only)
Thermostats, to open: 155° F.
Fan: 28" Dia., Thermal Control, Viscous Drive
Fuel Pump: American Bosch, APE8V-BB
Starting Sytem: Air, Ingersoll Rand

FUEL TANKS: 2 x 70 Imp. Galls. Standard Equip.

ELECTRICAL SYSTEM: 12 volt, 55 amp.

CLUTCH: CL75
Type: Twin Plate, 14" Dia., Ceramic Facings

TRANSMISSION: (MACK Maxitorque) TRXL107
Type: Six Speed, Triple Countershaft.
Ratio Range: Lo-Range Low 14.10 to Direct Top 5 Lo-Range Reverse Ratios, 36.66 to 4.27 plus Direct Range Reverse 8.81, 5 P.T.O. Speeds.

DRIVESHAFT:
Make and Size: Spicer 1850 Series 4.5" Dia., .259" thickness

BOGIE (MACK) SWS571C
Type: Top Mounted Dual Reduction
Carriers: CRDP92 & CRD93
Power Divider: Mounted in Forward Carrier
Ratios: 4.5, 5.13, 5.73, 6.94, 7.00
Wheelbase: 55"
Nominal Capacity at Ground: 44,000 lbs.

FRONT AXLE (MACK) FA532
Type: Reverse Elliot, Drop Forged I-Beam
Nominal Capacity at Ground: 12000 lbs.

SPRINGS:

	Front	Rear
Size	54" x 3.5"	55" x 4"
No. of leaves & Thickness	10 x .323"	11 x .788"

BRAKES: Air, Cam & Lever
Front: 16.5" x 4" (276 sq. ins.)
Rear: 16.5" x 7" (952 sq. ins.)
Air Compressor: Tu-Flo 500 12 cu. ft. (approx.)
Air Reservoir Capacity: 3,000 cu. in. (approx.)

WHEELS & TYRES:
Wheels: Cast Spoke
Tyres: 10.00 x 20 x 12 ply (11, Aust. Mfr.)
Rims: 7.5" Std., 8.00" Optional

STEERING GEAR: Manual Type Standard

FRAME: Size: 9" x 3.25" x .25" with .25" inside reinforcement
Material: Chrome Manganese, Heat Treated Steel
Section Modulus: 9.76

CAB (MACK)
Type: Tilt-Sleeper 80.5 BBC 50° Tilt Angle, Hydraulic Tilt Std., 30" Sleeper Compartment, 6" Mattress, Draw Curtains, Reading Light
Optional: CA38 Tilt Non-Sleeper, 50.5" BBC

AUTOLIT
Automobile – Truck – Motorcycle 1900 to Present
ORIGINAL Sales Brochures, Manuals, Books, Posters, Catalogs, and MUCH More. World's largest selection!

CA 38 NON-SLEEPER TILT CAB
50.5" BBC

Mack FR795RS

CHASSIS AND CAB EQUIPMENT (Common to Both Cab Types)

Automatic Radiator Shutters
Flush Type Front Bumper
Automatic reset circuit breaker
Cab roof vent
Air Horn
I.C.C. and Marker Lamps
Front Parking Lamps
Front Turn Indicator Lamps
Clearance Lamps
Stop and Tail Lamps
Automatic Back up Lamp
Interior Sun Visor, driver's side
Tachourmeter, single hand
Speedometer
Breakaway Safety Valve
Hand Control Brake Valve
Semi-Trailer Brake and Electrical connections
Dual Windshield Wipers, air, twin motors
Windshield Washers
Aeroquip Flex. Lines, Oil, Air and Fuel
Exhaust Pyrometer
Voltmeter
Bostrom Viking T Bar Driver's Seat
Paintwork. Single Colour to Client's choice, variations, optional extra: Running Gear and Undercarriage, Black.
Low Air pressure indicator, buzzer type
Dual West Coast Rear Vision Mirrors
Front Shock Absorbers
Graduated Windshield
Under Frame Exhaust
12 ton Jack, Handle, Wheel Wrench
Front Towing Hooks
Isolated Air Brake Reservoir
M.G.M. Auxiliary Spring Brake with separate air release tank.

EXTRA COST OPTIONS:

FRAME, 10.5", Single, or Double, according to application.
Section Modulus: 11.83/11.97.
STEERING: Power Assisted Type.
ENGINE BRAKE: Mack Dynatard.
EXHAUST: Vertical Stack, Left Side.

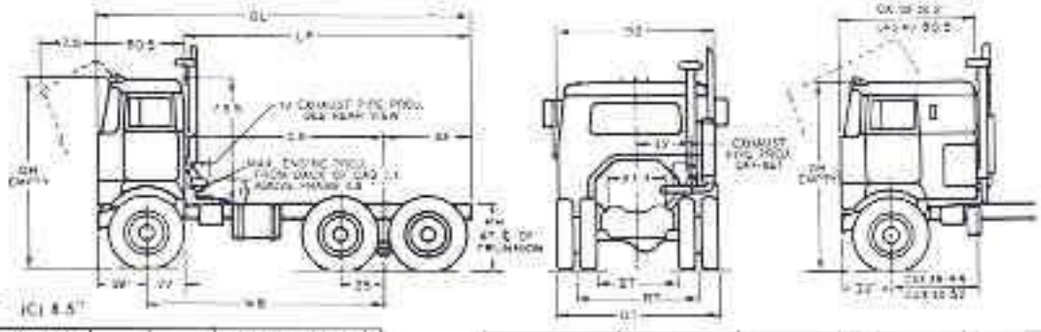

F-685: (A) 15" (B) 7.1" (C) 8.5"

WB	Standard Cab CA 68		Sleeper Cab CAS 40		AF	OL	Turning Circle Dia. (Outer edge of tyre) Ft.	
	LP	OA	LP	OA			Right	Left
144	170	122	140	92	48	320.5	57 ft.	57 ft.
166	191	143	161	113	48	241.5	65 ft.	65 ft.
186	270	164	240	134	100	320.5	71 ft.	71 ft.
244	342	222	312	192	100	392.5	88 ft.	88 ft.

Chassis dimensions are in inches and are for standard chassis unless otherwise denoted.

TYRE SIZE	OH Approx.	RIS		OT
		Empty	Loaded	
10.00 x 20	117.6"	40.0"	38.3"	85.3
10.00 x 22	118.7"	41.5"	40.0"	85.3
11.00 x 20	115.3"	41.4"	38.7"	85

Frame heights are subject to variations: 1" empty, ½" loaded.

Illustrations & Specifications may be subject to change without notice.

MACK TRUCKS Australia Pty. Ltd.

1728 Ipswich Road, Rocklea, Queensland

Telegrams: Macktrucks, Brisbane **Telephone: Brisbane 47 1644**

AUTOLIT
Automobile – Truck – Motorcycle 1900 to Present
ORIGINAL Sales Brochures, Manuals, Books, Posters, Catalogs, and MUCH More. World's largest selection!

FR795RST

CAS 40 SLEEPER — TILT CAB
30" SLEEPER COMPARTMENT

HIGHWAY DUTY TANDEM DRIVE CHASSIS

DYNAMIC
V8 MAXIDYNE
DIESEL POWER

STANDARD SPECIFICATIONS

WHEELBASE: 144", 165", 186", 244"
(See Chart on rear)

ENGINE:
Mack Diesel, ENDT665 Maxidyne
Type: Turbocharged, 90° Vee Eight, Open Chamber
Bore and Stroke: 5.25" x 6"
Piston Displacement: 866 cu. ins. 14.2 litres
R.A.C./A.M.A. Horsepower Rating: 88.2
Brake Horsepower: @ 1350 r.p.m., 280
@ 2100 r.p.m., 325
@ 2400 r.p.m., 322
Max. Torque: 1100 lbs/ft @ 1350 r.p.m.
Lube Oil Filter: (10 Imp. Qts.) Comb. Full flow and by-pass
Total Engine Oil Capacity, incl. filter: 28 Imp. Qts.
Air Cleaner: Dry Type, Standard
Radiator: Frontal Area, 1000 sq. ins. std.
Water Capacity: 47 Imp. Qts. (engine only)
Thermostats, to open: 155° F.
Fan: 28" Dia., Thermal Control, Viscous Drive
Fuel Pump: American Bosch, APE8V-BB
Starting Sytem: Air, Ingersoll Rand

FUEL TANKS: 2 x 70 Imp. Galls. Standard Equip.

ELECTRICAL SYSTEM: 12 volt, 55 amp.

CLUTCH: CL75
Type: Twin Plate, 14" Dia., Ceramic Facings

TRANSMISSION: (MACK Maxitorque) TRL1078
Type: 5 speed, Direct 5th ,Triple Countershaft
Ratio Range: Low, 8.59 to 5th Direct. Reverse 8.13

OPTIONAL TRANSMISSION: Maxitorque TRXL107
Ratio Range: As TRL1078, plus Lo-Range Low 14.10
5 Lo-Range Reverse Ratios, 36.66 to 4.27, plus Direct Range 8.81.
5 P.T.O. Speeds

DRIVESHAFT:
Make and Size: Spicer 1850 Series 4.5" Dia., .259" thickness

BOGIE (MACK) SWS56C
Type: Top Mounted Dual Reduction
Carriers: CRDP92 & CRD93
Power Divider: Mounted in Forward Carrier
Ratios: 4.5, 5.13, 5.73, 6.94, 7.00
Wheelbase: 50"
Nominal Capacity at Ground: 34,000 lbs.

FRONT AXLE (MACK) FA532
Type: Reverse Elliot, Drop Forged I-Beam
Nominal Capacity at Ground: 12000 lbs.

SPRINGS:

	Front	Rear
Size	54" x 3.5"	50" x 4"
No. of leaves & Thickness	10 x .323"	8 x .625"

BRAKES: Air, Cam & Lever
Front: 16.5" x 4" (276 sq. ins.)
Rear: 16.5" x 7" (952 sq. ins.)
Air Compressor: Tu-Flo 500 12 cu. ft. (approx.)
Air Reservoir Capacity: 3,000 cu. in. (approx.)

WHEELS & TYRES:
Wheels: Cast Spoke
Tyres: 10.00 x 20 x 12 ply (11, Aust. Mfr.)
Rims: 7.5" Std., 8.00" Optional

STEERING GEAR: Manual Type Standard

FRAME: Size: 9" x 3.25" x .25" with .25" inside reinforcement
Material: Chrome Manganese, Heat Treated Steel
Section Modulus: 9.78

CAB (MACK)
Type: Tilt-Sleeper 80.5 BBC. 50° Tilt Angle, Hydraulic Tilt Std., 30" Sleeper Compartment, 6" Mattress, Draw Curtains, Reading Light
Optional: CA38 Tilt Non-Sleeper, 50.5" BBC

AUTOLIT
Automobile – Truck – Motorcycle 1900 to Present
ORIGINAL Sales Brochures, Manuals, Books, Posters, Catalogs, and MUCH More. World's largest selection!

CA 38 NON-SLEEPER TILT CAB
50.5" BBC

Mack FR795RST

CHASSIS AND CAB EQUIPMENT (Common to Both Cab Types)

Automatic Radiator Shutters
Flush Type Front Bumper
Automatic reset circuit breaker
Cab roof vent
Air Horn
I.C.C. and Marker Lamps
Front Parking Lamps
Front Turn Indicator Lamps
Clearance Lamps
Stop and Tail Lamps
Automatic Back up Lamp
Interior Sun Visor, driver's side
Tachourmeter, single hand
Speedometer

Breakaway Safety Valve
Hand Control Brake Valve
Semi-Trailer Brake and Electrical connections
Dual Windshield Wipers, air, twin motors
Windshield Washers
Aeroquip Flex. Lines, Oil, Air and Fuel
Exhaust Pyrometer
Voltmeter
Bostrom Viking T Bar Driver's Seat.
Paintwork: Single Colour to Client's choice; variations, optional extra. Running Gear and Undercarriage, Black.
Low Air pressure indicator, buzzer type
Dual West Coast Rear Vision Mirrors

Front Shock Absorbers
Gradated Windshield
Under Frame Exhaust
12 ton Jack, Handle, Wheel Wrench
Front Towing Hooks
Isolated Air Brake Reservoir
M.G.M. Auxiliary Spring Brake with separate air release tank.

EXTRA COST OPTIONS:

FRAME: 10.5" Single.
Section Modulus: 11.83.
STEERING: Power Assisted Type.
ENGINE BRAKE: Mack Dynatard.
EXHAUST: Vertical Stack, Left Side.

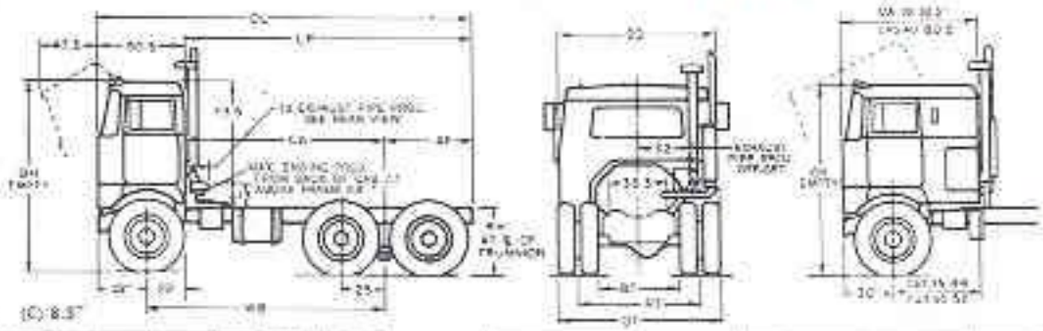

F-685: (A) 15" (B) 7.1" (C) 8.5"

WB	Standard Cab CA 38		Sleeper Cab CAS 40		AF	OL	Turning Circle Dia. (Outer edge of tire)	
	LF	CA	LF	CA			Right	Left
144	170	122	140	92	48	228.5	57 ft.	57 ft.
169	191	143	161	113	48	241.5	65 ft.	65 ft.
186	270	164	240	134	108	320.5	71 ft.	71 ft.
244	342	222	312	192	120	392.5	88 ft.	88 ft.

Chassis dimensions are in inches and are for standard chassis unless otherwise denoted.

TYPE SIZE	CH Approx.	RH		CT
		Empty	Loaded	
10.00 x 20	117.5"	40.9"	38.2"	95.3
10.00 x 22	116.7"	41.9"	40.1"	95.3
11.00 x 20	118.3"	41.4"	39.7"	98

Frame heights are subject to variations: 1" empty, ½" loaded.

Illustrations & Specifications may be subject to change without notice.

MACK TRUCKS Australia Pty. Ltd.
1728 Ipswich Road, Rocklea, Queensland
Telegrams: Macktrucks, Brisbane Telephone: Brisbane 47 1644

1971

AUTOLIT
Automobile – Truck – Motorcycle 1900 to Present
ORIGINAL Sales Brochures, Manuals, Books, Posters, Catalogs, and MUCH More. World's largest selection!

FR797RST

CAS 40 SLEEPER — TILT CAB
30" SLEEPER COMPARTMENT

HIGHWAY DUTY TANDEM DRIVE CHASSIS

DYNAMIC V8 THERMODYNE DIESEL POWER

SPECIFICATIONS

WHEELBASE: 144", 165", 186", 244"
(See Chart at rear)

ENGINE:
Mack Diesel, ENDT866 Thermodyne
Type: Turbocharged, 90° Vee-Eight Open Chamber (Direct Injection)
Bore & Stroke: 5.25" x 5"
Piston Displacement: 866 cu. ins. (14.2 litres)
R.A.C./A.M.A. Horsepower Rating: 88.2
Brake Horsepower: 375 @ 2200 r.p.m. (gov.)
Max. Torque: 1040 lbs./ft. @ 1600 r.p.m.
Lube Oil Filter: (10 Imp. Qts.) Comb. Full-Flow and By-Pass
Total Engine Oil Capacity, incl. filter and cooler: 35 Imp. Qts.
Air Cleaner: Dry Type, Standard
Radiator: Frontal Area, 1000 sq. ins. std.
Water Capacity: 48 Imp. Qts. (engine only)
Thermostats, to open: 155°
Fan: 28" Dia., Thermal Control, Viscous Drive
Fuel Pump: American Bosch, Multiple Plunger, APE6V-BB
Starting System: Air, Ingersoll Rand

FUEL TANKS: 2 x 70 Imp. Galls. Standard Equip.

ELECTRICAL SYSTEM: 12 Volt, 55 amp. Generator, or 85 amp. alternator

CLUTCH: CL79
Type: Twin-Plate, 15.5" Dia. Ceramic Facings

TRANSMISSION: MACK Maxitorque TRDL107
Type: 10 Speed, Compact Underdrive Air Shift Splitter, Triple Countershaft. Total Ratio Range, Direct: 8.59 to 1.00. Underdrive: 11.04 to 1.29.
5 Rev. Ratios: 36.66 to 4.27
P.T.O. Provision: Left Side, 8 Hole S.A.E., Right Side, 6 Hole S.A.E. 5 P.T.O. Speeds
Optional Extra P.T.O., rear of transmission, 51% of engine R.P.M.

OPTIONAL EXTRA TRANSMISSION:
Maxitorque TRTXL107
Type: 12 Speed, Compact Extended Range Underdrive Air Shift Splitter, Triple Countershaft.
Total Ratio Range, As TRDL107, plus Front Compound 14.44 and Rear Compound 18.56
5 Rev. Ratios as TRDL107.
P.T.O. Provision as TRDL107, plus 31% of engine r.p.m. at rear P.T.O. in low range

DRIVESHAFT: Make & Size: Spicer 1850 Series, 4.5" Dia., .259" Thickness.

BOGIE: (MACK) SWS56C
Type: Top Mounted Dual Reduction
Carriers: CRDP92 & CRD93
Ratios: 4.6, 5.13, 5.73, 6.94, 7.00
Power Divider: Mounted in forward Carrier
Wheelbase: 50"
Nominal Capacity at Ground: 34,000 lbs.

FRONT AXLE: (MACK) FA532
Type: Reverse Elliot, Drop Forged I Beam.
Nominal Capacity at Ground: 12,000 lbs.

SPRINGS:

	Front	Rear
Size	54" x 3.5"	50" x 4"
No. of leaves & thickness	10 x .323"	8 x .625"

BRAKES: Air, Cam & Lever
Front: 16.5" x 4" (276 sq. ins.)
Rear: 16.5" x 7" (952 sq. ins.)
Air Compressor: Tu-Flo 500 (12 cu. ft. approx)
Air Reservoir Capacity: 3,000 cu. ins. (approx)

WHEELS & TYRES:
Wheels: Cast Spoke
Tyres: 10.00 x 20 x 12 ply (11, Aust. Mfr.)
Rims: 7.5" Std., 8.00" Optional

STEERING GEAR: Manual Type Standard

FRAME: Size: 9" x 3.25" x .25" with .25" inside reinforcement
Material: Chrome Manganese, Heat Treated Steel
Section Modulus: 9.76

CAB: (MACK)
Type: Tilt-Sleeper 80.5 BBC 50° Tilt Angle Hydraulic Tilt Std., 30" Sleeper Compartment, 6" Mattress, Draw Curtains, Reading Light
Optional: CA38 Tilt Non-Sleeper, 50.5" BBC

AUTOLIT
Automobile – Truck – Motorcycle 1900 to Present
ORIGINAL Sales Brochures, Manuals, Books, Posters, Catalogs, and MUCH More. World's largest selection!

CA 38 NON-SLEEPER TILT CAB
50.5" BBC

Mack FR797RST

CHASSIS AND CAB EQUIPMENT (Common to Both Cab Types)

Automatic Radiator Shutters
Flush Type Front Bumper
Automatic reset circuit breaker
Cab roof vent
Air Horn
I.C.C. and Marker Lamps
Front Parking Lamps
Front Turn Indicator Lamps
Clearance Lamps
Stop and Tail Lamps
Automatic Back up Lamp
Interior Sun Visor, driver's side
Tachometer, single hand
Speedometer
Breakaway Safety Valve
Hand Control Brake Valve
Semi-Trailer Brake and Electrical connections
Dual Windshield Wipers, air, twin motors
Windshield Washers
Aeroquip Flex. Lines, Oil, Air and Fuel
Exhaust Pyrometer
Voltmeter
Bostrom Viking T Bar Driver's Seat
Paintwork: Single Colour to Client's choice, varnishes, optional extra. Running Gear and Undercarriage, Black.
Low Air pressure indicator, buzzer type
Dual West Coast Rear Vision Mirrors
Front Shock Absorbers
Gradated Windshield
Under Frame Exhaust
12 ton Jack, Handle, Wheel Wrench
Front Towing Hooks
Isolated Air Brake Reservoir
M.G.M. Auxiliary Spring Brake with separate air release tank.

EXTRA COST OPTIONS:

FRAME: 10.5" Single
Section Modulus: 11.83
STEERING: Power Assisted Type
ENGINE BRAKE: Mack Dynatard
EXHAUST: Vertical Stack, Left Side.

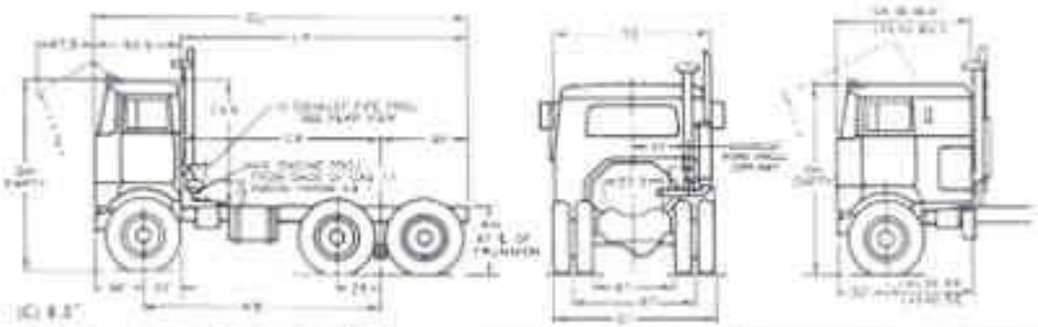

F.483: (A) 1.1" (B) 7.1" (C) 8.3"

WB	Standard Cab CA 38		Sleeper Cab CAS 42		AF	OL	Turning Circle Dia (Outer edge of tyre)	
	LP	CA	LP	CA			Right	Left
144	170	122	140	92	48	290.8	57 ft.	57 ft.
165	191	143	161	113	48	241.3	60 ft.	65 ft.
186	270	164	240	134	106	320.5	71 ft.	71 ft.
264	342	222	312	192	120	392.8	88 ft.	88 ft.

Chassis dimensions are in inches and are for standard chassis unless otherwise denoted.

TYRE SIZE	OH Approx	RH		OT
		Empty	Loaded	
10.00 x 20	117.5"	40.9"	38.3"	95.3
10.00 x 22	118.7"	41.3"	40.2"	95.3
11.00 x 20	118.5"	41.4"	38.7"	96

Frame heights are subject to variations: ½" empty, ¾" loaded.

Illustrations & Specifications may be subject to change without notice.

MACK TRUCKS Australia Pty. Ltd.
1728 Ipswich Road, Rocklea, Queensland
Telegrams: Macktrucks, Brisbane Telephone: Brisbane 47 1644

AUTOLIT
Automobile – Truck – Motorcycle 1900 to Present
ORIGINAL Sales Brochures, Manuals, Books, Posters, Catalogs, and MUCH More. World's largest selection!